CMRI CERT NO.:– CIMFR/TC/SR/H483
SUPPLE. T.C. NO. :– CIMFR/TC/S/H144
CAT.NO.:– KJB–A

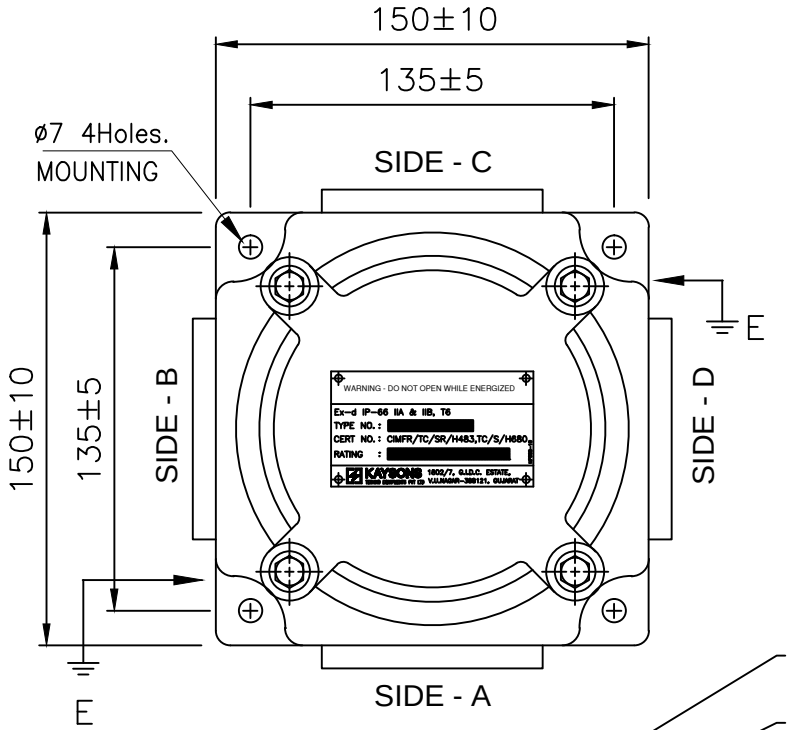

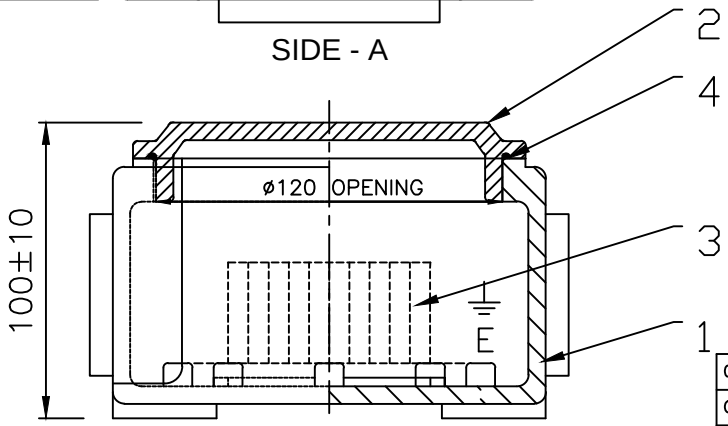

TECHNICAL DATA

ENCLOSURE :–
EX–d AS PER IS/IEC 60079–1:2007

PROTECTION ;–
IP–66 AS PER IS 12063–1987 (IS/IEC 60529:2001)

AREA CLASSIFICATION :–
ZONE –1 & 2

GAS GROUPS :–
IIB

TEMPERATURE CLASS :–
T6

MATERIAL OF CONSTRUCTION :–
CAST AL ALLOY LM–6

GASKET :–
MOLDED NEOPRENE

HARDWARE :–
STEEL ZINC PLATED/STAINLESS STEEL

FINISH :–
LIGHT GREY

EARTHING :–
1 NO. INSIDE & 2 NOS. OUTSIDE

CABLE ENTRY :–
TO BE SPECIFIED WHILE ORDERING.

CABLE ENTRY & TERMINAL DETAILS

NO.	DESCRIPTION	QTY	MAT./RATING
04.	GASKET (ENDLESS, MOULDED)	1	NEOPRENE
03.	TERMINAL	A.R.	CLIPON TYPE
02.	COVER	1	CAST AL. ALLOY
01.	BODY	1	CAST AL. ALLOY

SR. NO.	TAG NO.	SIDE–A	SIDE–B	SIDE–C	SIDE–D	NO. OF TERMINAL	QTY.
		NO. OF CABLE ENTRY					

THE INFORMATION CONTAINED IN THIS DRAWING IS THE PROPERTY OF KAYSONS TECHNO EQUIPMENTS PVT. LTD. AND IS NOT TO BE COPIED OR MISUSED IN ANY WAY.

ISSUE	DATE	BY	MODIFICATION

CLIENT :–		DRAWN	KBP	1.8.13
CONSULANT :–		APP'D	HPB	1.8.13
P.O.NO. :–		CH'D	NPB	1.8.13

KAYSONS
TECHNO EQUIPMENTS PVT LTD
1802/7, G.I.D.C. ESTATE,
V.U.NAGAR 388121. (GUJARAT)

DESCRIPTION:–
FLAMEPROOF WEATHERPROOF JUNCTION BOX

SHT.NO.	REV.	DRG.NO.:–
1 OF 1	0	H03